Cut out in the right size:
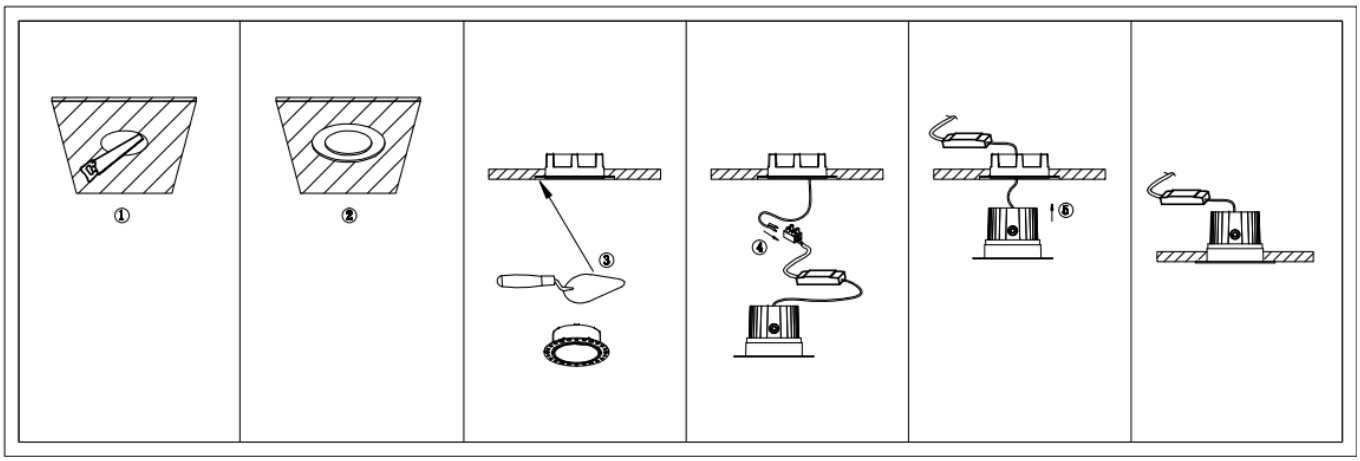
86.D059.1***.**	80mm
86.D059.2***.**	100mm
86.D059.3***.**	110mm
86.D059.4***.**	135mm